3.1 Linear Pneumatic Diaphragm Actuators

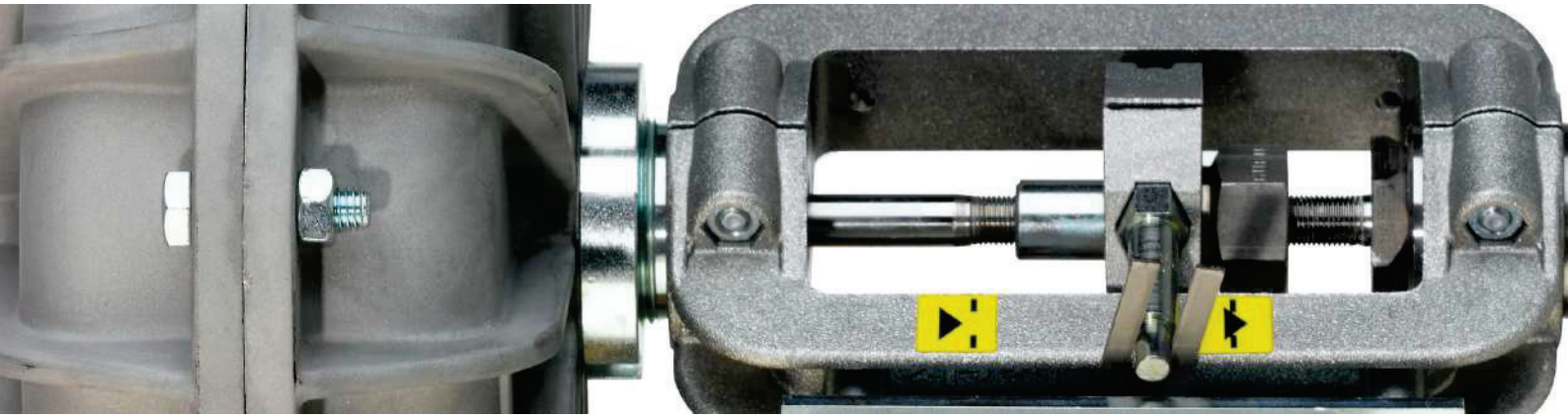

Advantages of linear pneumatic diaphragm actuators:

- fast positioning
- specified position in case of pressure failure
- powerful
- can be operated at high ambient temperatures
- can be operated in potentially explosive atmospheres
- number of springs selectable for adjustment of actuator force
- easy conversion NO / NC without special equipment
- handwheel optional

Table for selecting baelz 373-PXX actuators			
Spring force, manual control (N)	**Diaphragm surface (cm²)**	**Max. Stroke (mm)**	**Type baelz 373**
1020 - 4030	240	22	P21-3 to P21-18
7590	240	22	P21-V6
1846 - 3692	240	40	P22-3 to P22-6
2480 - 10560	620	44	P31-3 to P31-18
2201 - 8115	620	66	P32-3 to P32-18
3765 - 41600	1250	44, 66	P41-3 to P41-V6

Example of identification for ordering: **373-P21L-12-Fu-S21-L-H21-22mm**

baelz 373 – P XX – 12 – Fu – S21-L – H21 – 22

Actuator model (XX)						
	P21 / P21L					
	P22 / P22L					
	P31					
	P32					
	P41					
Number of springs (Z)						
		3				
		6				
		12				
		18				
		V6 -6 reinforced				
Safety function (V)						
			Fo - spindle extended			
			Fu - spindle retracted			
Yoke type (S)						
				S21 / S21-L		
				S41 / S41C		
Hand operation (H), if applicable						
					H21	
					H31	
					H41	
Stroke (mm)						
						8, 12, 16, 22, 40, 44, 66

page 96

baelz 373-P11

- For DN 15...125
- Stroke: 12, 16, 22 mm
- Power: 990 N
- Weight, approx.: 2.1 kg
- Temperature: 0 ... +80°C
- Humidity: 0 ... 90%
- Pressure: 1.2...6 bar
- Housing: Aluminum
- Diaphragm: NBR
- Fo/Fu-Actuator

page 97

baelz 373-P21

- For DN 15...125
- Stroke: 8, 12, 16, 22 mm
- Power: 1020...7590 N
- Weight: 5.3-8.8 kg
- Temperature: 0 ... +80°C
- Humidity: 0 ... 90%
- Pressure: 1.2...6 bar
- Housing: Aluminum
- Diaphragm: NBR

page 98

baelz 373-P22

- For DN 15...125
- Stroke: 40 mm
- Power: 1846...3692 N
- Weight: 6.3-6.6 kg
- Temperature: 0 ... +80°C
- Humidity: 0 ... 90%
- Pressure: 1.2...6 bar
- Housing: Aluminum
- Diaphragm: NBR

page 99

baelz 373-P31

- For DN 150
- Stroke: 44 mm
- Power: 2480...10560 N
- Weight: 27.7-36.5 kg
- Temperature: 0 ... +80°C
- Humidity: 0 ... 90%
- Pressure: 1.2...6 bar
- Housing: Aluminum
- Diaphragm: NBR

page 100

baelz 373-P32

- For DN 200
- Stroke: 66 mm
- Power: 4402...8115 N
- Weight: 36-43 kg
- Temperature: 0 ... +80°C
- Humidity: 0 ... 90%
- Pressure: 3...6 bar
- Housing: Aluminum
- Diaphragm: NBR

page 101

baelz 373-P41

- For DN 150...300
- Stroke: 44, 66 mm
- Power: 3765...31920 N
- Weight: 55.5-66.5 kg
- Temperature: 0 ... +80°C
- Humidity: 0 ... 90%
- Pressure: 1.2...6 bar
- Housing: Aluminum
- Diaphragm: NBR

page 102

Accessories for Linear Pneumatic Diaphragm Actuators

- Positioners
- Switches
- Pressure controllers

Direction of Action with Control Valve

Direction of action **NC** (normally closed): pressure failure → valve **closed**
Direction of action **NO** (normally open): pressure failure → valve **open**

The actuator has the following directions of action:

Fu/SB (spring below) → in case of air/power **supply failure actuator retracts spindle**
Fo/SA (spring above) → in case of air/power supply failure **actuator extends spindle**

The valve has 2 optional closing directions: *spindle retracted = valve closed* and *spindle extended = valve closed.*

The combinations resulting from these options are shown below.

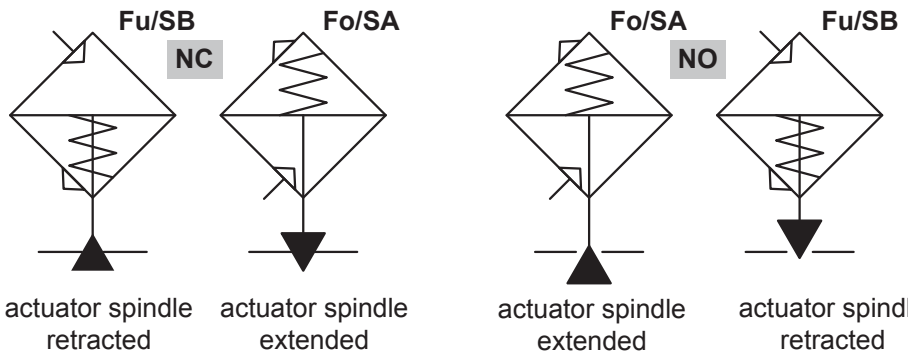

baelz 373-P11
Fo version
(spring above)

Options					
Designation	Valve Spindle Ø (mm)	Force (N)	Min. supply air pressu-re (bar)	No. springs	Weight, approx. (kg)
P11-1-Fo/Fu	10	950	1.2	1	2.1

baelz 373-P11

DESCRIPTION

baelz 373-P21 compact pneumatic linear actuators with aluminum housing EN AC-AlSi9Cu3(Fe) and NBR diaphragm.
For control valves up to DN 65.

TECHNICAL SPECIFICATIONS

Ambient conditions: temperature: 0 ... +80° C;
relative humidity: 0 ... 90%
Max. supply air pressure: 6 bar
Air connection: push-in fitting for tube Ø 8 mm
Yoke and coupling made of aluminum, fasteners made of zinc plated steel.
Stroke: 12, 16, 22 mm
Number of springs: 1

OPTIONS

Special Feature: Fo/Fu-Actuator
Fo (spring above) or Fu (spring below) depends upon which way up the actuator is mounted, so Fo or Fu can be selected with no need for dismantling the actuator. Components used remain identical for Fo and Fu.
Fo = Spring above: spindle extended is normal position. The springs extend the spindle, compressed air retracts the spindle.
Fu = Spring below: spindle retracted is normal position. The springs retract the spindle, compressed air extends the spindle.
Yoke options:
S21 yoke (standard) - for valves with spindle Ø10 mm

baelz 373-P11 dimensions (mm)

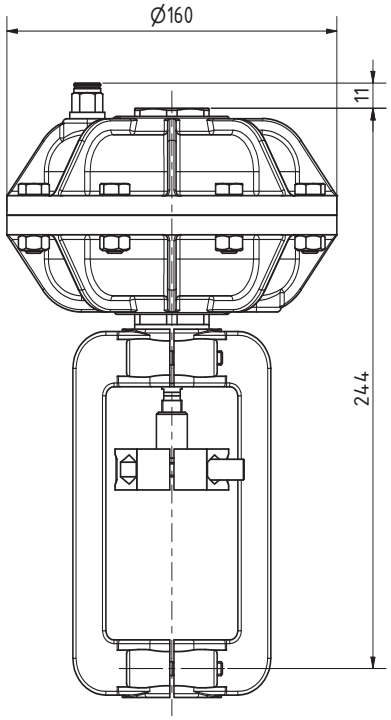

baelz 373-P21

DESCRIPTION

baelz 373-P21 compact pneumatic linear actuators with aluminum housing EN AC-AlSi9Cu3(Fe) and NBR diaphragm.
For control valves up to DN 125.

TECHNICAL SPECIFICATIONS

Ambient conditions: temperature: 0 ... +80° C;
relative humidity: 0 ... 90%
Max. supply air pressure: 6 bar
Air connection: push-in fitting for tube Ø 8 mm
Yoke and coupling made of aluminum (P21L: coupling zinc plated steel), fasteners made of zinc plated steel.
Stroke: 8, 12, 16, 22 mm
Number of springs: 3, 6, 12, 18 or 6 reinforced (V6)

OPTIONS

Fo = Spring above: spindle extended is normal position. The springs extend the spindle, compressed air retracts the spindle.
Fu = Spring below: spindle retracted is normal position. The springs retract the spindle, compressed air extends the spindle.
Manual operation:
P21-H21 (for 3, 6, 12, 18 spring) - handwheel Ø120 mm
P21-V6-H21 (for reinforced spring) - handwheel Ø 200 mm
Yoke options:
S21 yoke (standard) - for valves with spindle Ø10 mm
S21-L yoke - for valves with spindle Ø16 mm
S23 yoke - spindle Ø10 mm (für high differential pressures)
S23L yoke - spindle Ø16 mm (für high differential pressures)

Options					
Designation	**Valve Spindle Ø (mm)**	**Force (N)**	**Min. supply air pressu-re (bar)**	**№ springs**	**Weight, approx. (kg)**
P21-3-Fo/Fu	10	1020	1.2	3	5.3
P21L-3-Fo/Fu	16				
P21-6-Fo/Fu	10	2040	3	6	5.6
P21L-6-Fo/Fu	16				
P21-12-Fo/Fu	10	3390	6	12	5.9
P21L-12-Fo/Fu	16				
P21-18-Fo/Fu	10	4030	6	18	6
P21L-18-Fo/Fu	16				
P21-V6-Fo/Fu	10	7590	6	6	8.8
P21L-V6-Fo/Fu	16				
+H21	-				+2

Extras	Order number
Mechanical stroke limitation	MP373-P21-1411
Silicone membrane, Ambient temperature 0...100 °C	MP373-P21-501
Polyester coated inside and out, black, for hydraulic operation, includes coating of yoke. With stainless steel fittings and yoke connection. Ambient temperature max. 50 °C	MP373-P21-521
Special coating, FDA approved, includes coating of yoke. With stainless steel fittings and yoke connection.	MP373-P21-531

baelz 373-P21 dimensions (mm)

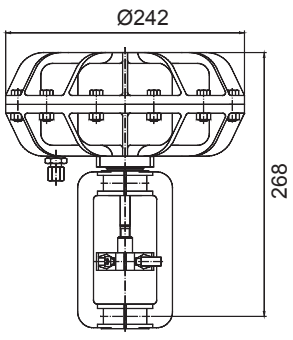

Actuator baelz 373-P21-S21

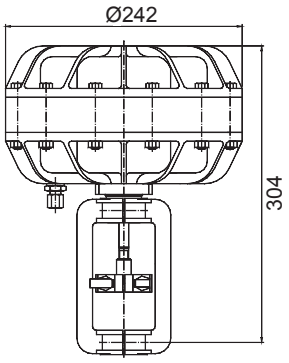

Actuator baelz 373-P21-V6-S21

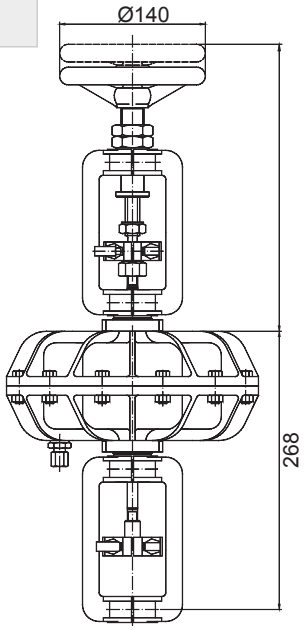

baelz 373-P21-S21-H21

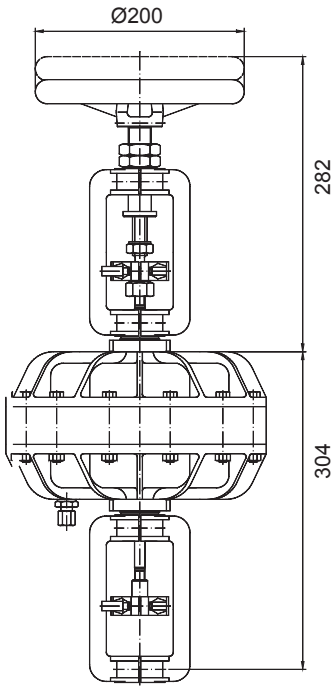

baelz 373-P21-V6-S21-H21

Baelz-Katalog_11_EN_MJ_0221

baelz 373-P22

DESCRIPTION

baelz 373-P21 compact pneumatic linear actuators with aluminum housing EN AC-AlSi9Cu3(Fe) and NBR diaphragm. For control valves up to DN125.

TECHNICAL SPECIFICATIONS

Ambient conditions: temperature: 0 ... +80°C;
relative humidity: 0 ... 90%
Max. supply air pressure: 6 bar
Air connection: push-in fitting for tube Ø 8 mm
Yoke and coupling made of aluminum (P22L: coupling zinc plated steel), fasteners made of zinc plated steel.

Stroke: 40 mm
Number of springs: 3, 6

OPTIONS

Fo = Spring above: spindle extended is normal position. The springs extend the spindle, compressed air retracts the spindle.
Fu = Spring below: spindle retracted is normal position. The springs retract the spindle, compressed air extends the spindle. M**anual operation:**
P22-H22 - handwheel Ø 120 mm
Yoke options:
S21 yoke (standard) - for valves with spindle Ø10 mm
S21-L yoke - for valves with spindle Ø16 mm

Options					
Designation	**Valve Spindle Ø (mm)**	**Force (N)**	**Min. supply air pressu-re (bar)**	**Nº. springs**	**Weight, approx. (kg)**
P22-3-Fo/Fu	10	1846	6	3	6.3
P22L-3-Fo/Fu	16				
P22-6-Fo/Fu	10	3692		6	6.6
P22L-6-Fo/Fu	16				
+H22	-				+2

Extras	Order number
Polyester coated inside and out, black, for hydraulic operation, includes coating of yoke. With stainless steel fittings and yoke connection. Ambient temperature max. 50 °C	MP373-P22-522

baelz 373-P22 dimensions (mm)

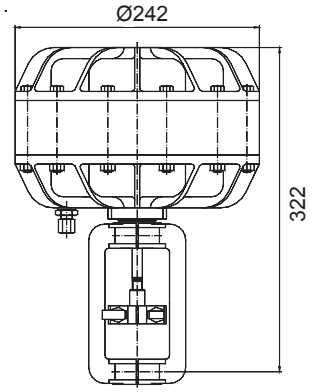

Actuator baelz 373-P22-S21

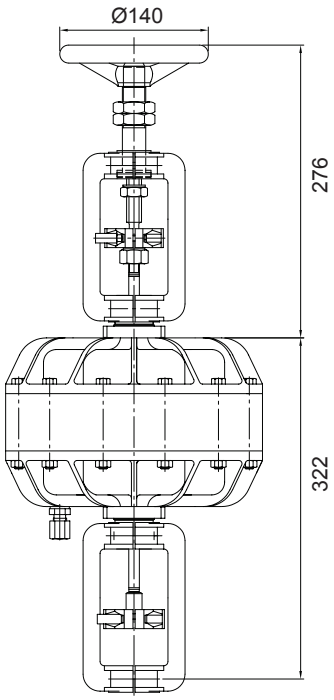

Actuator baelz 373-P22-S21-H22 (with handwheel)

baelz 373-P31

DESCRIPTION

baelz 373-P31 compact pneumatic linear actuators with aluminum housing EN AC-AlSi9Cu3(Fe) and NBR diaphragm.
For DN 150 control valves.

TECHNICAL SPECIFICATIONS

Ambient conditions: temperature: 0 ... +80° C;
relative humidity: 0 ... 90%
Max. supply air pressure: 6 bar
Air connection: push-in fitting for tube Ø 8 mm
Yoke, coupling and fasteners made of zinc plated steel.
Stroke: 44 mm
Number of springs: 3, 6, 18

OPTIONS

Fo = Spring above: spindle extended is normal position. The springs extend the spindle, compressed air retracts the spindle.
Fu = Spring below: spindle retracted is normal position. The springs retract the spindle, compressed air extends the spindle.
M**anual operation**:
P31-H31 - handwheel Ø 315 mm
Yoke options:
S41 - for valve control without cooling tube
S41C - for valve control with cooling tube

Options					
Designation	Valve Spindle Ø (mm)	Force (N)	Min. supply air pressu-re (bar)	Nº. springs	Weight, approx. (kg)
P31-3-Fo/Fu-S41	Ø 22	2480	1.2	3	27.7
P31-3-Fo/Fu-S41C					31.7
P31-6-Fo/Fu-S41		4960	3	6	29.5
P31-6-Fo/Fu-S41C					33.5
P31-18-Fo/Fu-S41		10560	6	18	32.5
P31-18-Fo/Fu-S41C					36.5
+ H31		-			+11

baelz 373-P31 dimensions (mm)

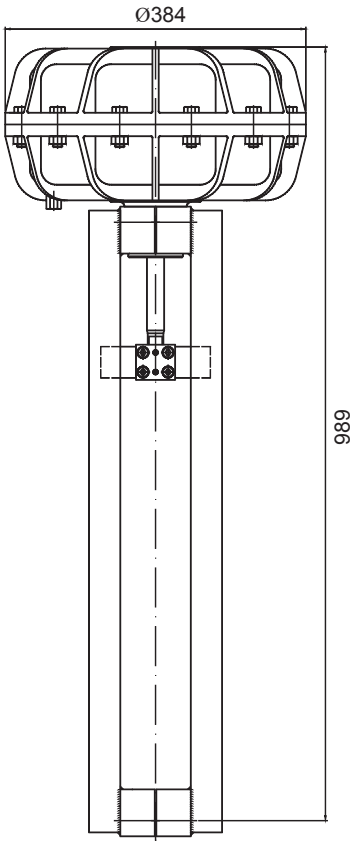

Actuator baelz 373-P31-S41C

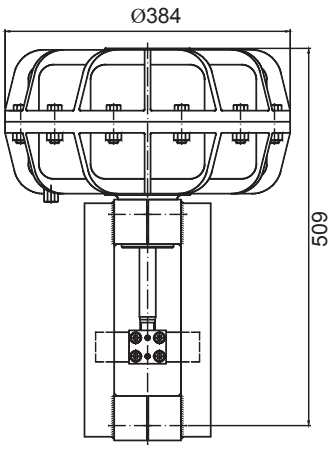

Actuator baelz 373-P31-S41

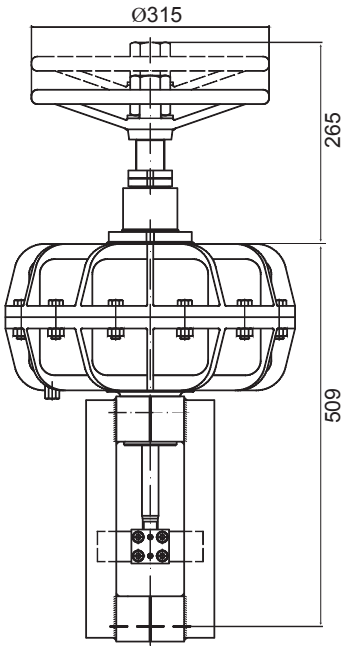

Actuator baelz 373-P31-S41-H31

baelz 373-P32

DESCRIPTION

baelz 373-P32 compact pneumatic linear actuators with aluminum housing EN AC-AlSi9Cu3(Fe) and NBR diaphragm.
For control valves sized DN 200 and upwards.

TECHNICAL SPECIFICATIONS

Ambient conditions: temperature: 0 ... +80°C;
relative humidity: 0 ... 90%
Max. supply air pressure: 6 bar
Air connection: push-in fitting for tube Ø 8 mm
Yoke, coupling and fasteners made of zinc plated steel.
Stroke: 66 mm
Number of springs: 3, 6, 18

OPTIONS

Fo = Spring above: spindle extended is normal position. The springs extend the spindle, compressed air retracts the spindle.
Fu = Spring below: spindle retracted is normal position. The springs retract the spindle, compressed air extends the spindle.
Yoke options:
S41 - for valve control without cooling tube
S41 - for valve control with cooling tube

Options					
Designation	Valve Spindle Ø (mm)	Force (N)	Min. supply air pressure (bar)	Nº. springs	Weight, approx. (kg)
P32-3-Fo/Fu-S41	Ø 22	2201	3	3	34.2
P32-3-Fo/Fu-S41C					38.2
P32-6-Fo/Fu-S41		4402	3	6	36
P32-6-Fo/Fu-S41C					40
P32-18-Fo/Fu-S41		8115	6	18	39
P32-18-Fo/Fu-S41C					43

baelz 373-P32 dimensions (mm)

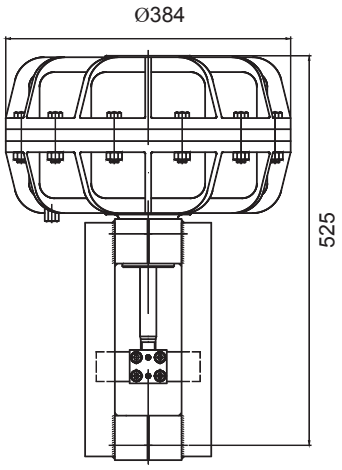

Actuator baelz
373-P32-S41

baelz 373-P41

DESCRIPTION

baelz 373-P41 compact pneumatic linear actuators with aluminum housing EN AC-AlSi9Cu3(Fe) and NBR diaphragm.
For control valves sized DN 150 and upwards.

TECHNICAL SPECIFICATIONS

Ambient conditions: Temperature: 0 ... +80° C;
relative humidity: 0 ... 90%
Max. supply air pressure: 6 bar
Air connection: push-in fitting for tube Ø 8 mm
Yoke, coupling and fasteners made of zinc plated steel.
Stroke: 44, 66 mm
Number of springs: 3, 6, 6 reinforced (V6)

OPTIONS

Fo = Spring above: spindle extended is normal position. The springs extend the spindle, compressed air retracts the spindle.
Fu = Spring below: spindle retracted is normal position. The springs retract the spindle, compressed air extends the spindle.
Manual operation:
P41-H41 - handwheel Ø 315 mm
Yoke options:
S41 - for valve control without cooling tube
S41 - for valve control with cooling tube

Options					
Designation	Valve Spindle Ø (mm)	Force (N)	Min. supply air pressure (bar)	Nº. springs	Weight, approx. (kg)
P41-3-Fo/Fu-S41	Ø 22	3765	1.2	3	55.5
P41-3-Fo/Fu-S41C					59.5
P41-6-Fo/Fu-S41		7530	3	6	58.5
P41-6-Fo/Fu-S41C					62.5
P41-V6-Fo/Fu-S41		31920	6	V6	65,0
P41-V6-Fo/Fu-S41C					69,0
+ H41		-			+11

baelz 373-P41 dimensions (mm)

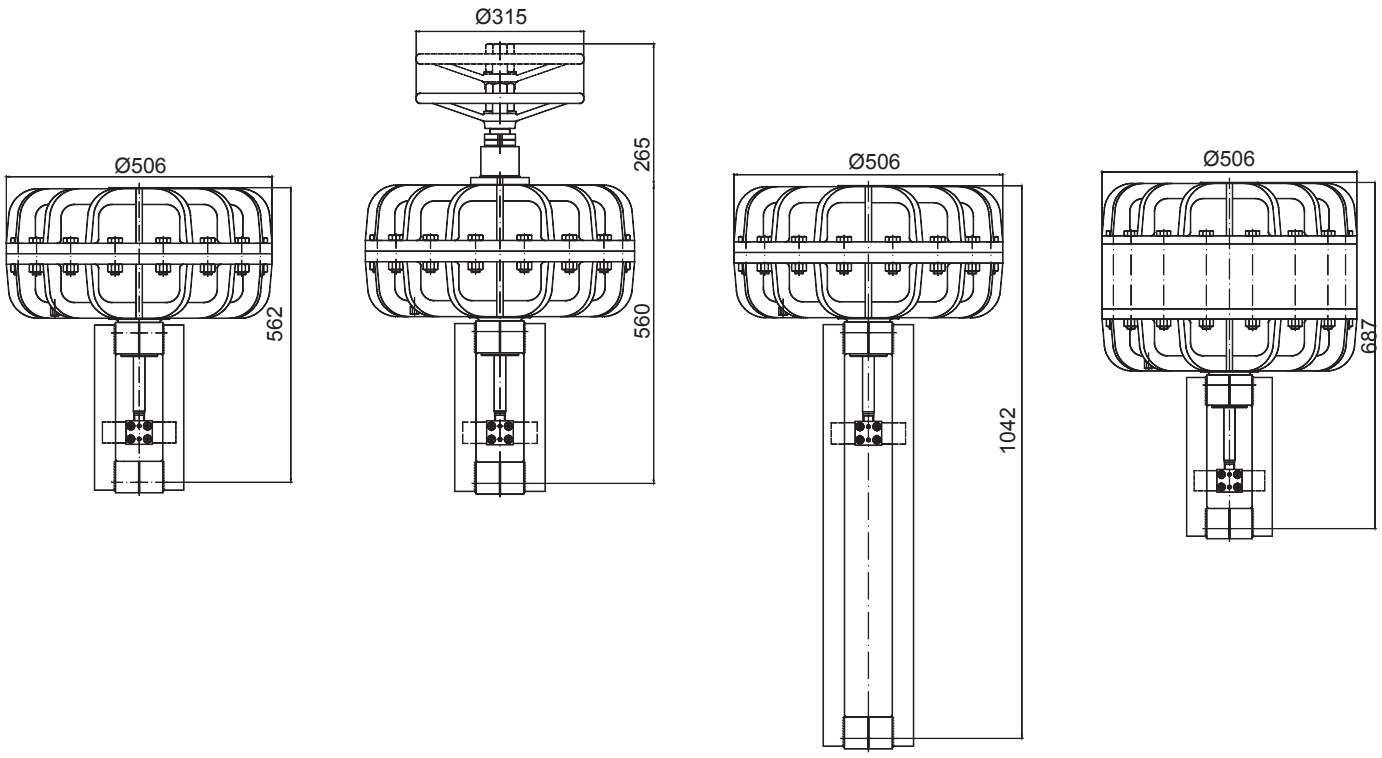

Actuator baelz 373-P41-S41

Actuator baelz 373-P41-S41-H31

Actuator baelz 373-P41-S41C

Actuator baelz 373-P41-V6-S41

Baelz-Katalog_11_EN_MJ_0221

baelz 87

DIGITAL I/P POSITIONER

The baelz 87 electro-pneumatic positioner compares an electrical actuating signal with the stroke of the pneumatic valve and thus regulates the required actuating pressure.

ADVANTAGES AT A GLANCE

- Easy operation with menu navigation and capacitive buttons
- Preset parameters, individually customizable if required
- Power-fail-safe storage of all parameters in the EEPROM
- Optional accessories: assembly kit, manometer attachment kit

Options	
87	without explosion protection
87-Ex	ATEX: II 2 G Ex ia IIC T4 / STCC: 0 Ex ia IIC T4 X
87-Ex-CSA	CSA: Ex ia IIC T4; Class I, Zone 0, AEx ia IIC T4; Class I, Div. 1, Groups A, B, C & D
87- ...	without mounting
87- ... -M	including mounting on baelz 373-P pneumatic actuator ...
Complete adaptation parts	Assembly package as replacement or for retrofitting, weight approx. 0.2 kg
Manometer mounting kit	including 2 manometers Ø 40 mm, display range: 0 ... 10 bar

baelz 87 positioner - technical specifications	
Input signal	4 ... 20mA (2-wire)
Fluid	Compressed air according to ISO 8573-1 - Particle content: Class 4; Oil content: Class 3
Air pressure	Max. 1.7 ... 7 bar (actuating pressure for linear actuators 6 bar)
Ventilate actuator flow	3.0 m_n^3/h at 1.4 bar; 8.5 m_n^3/h at 6 bar
Dearate actuator flow	4.5 m_n^3/h at 1.4 bar; 14.0 m_n^3/h at 6 bar
Air consumption	< 0.1 m_n^3/h to 6 bar
Housing / cover	Polyphthalamide (PPA) / polycarbonate (PC)
IP rating	IP 66
permissible ambient temp.	- 20 ... + 80°C (see also Ex approval)
Cable gland	Polyamide (PA), black, M20 x 1.5
Connecting thread	G 1/4, internal thread
Stroke	12...66 mm
Weight	approx. 0.7 kg

baelz 87 dimensions (mm)

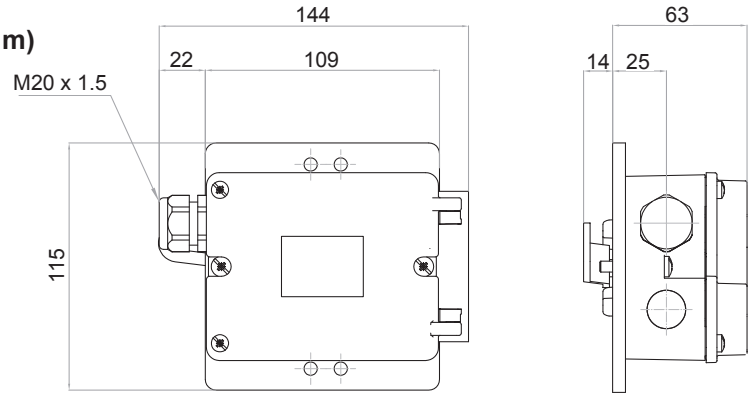

baelz 88

I/P POSITIONER

The baelz 88 electro-pneumatic positioner compares an electrical actuating signal with the stroke of the pneumatic valve and thus regulates the required actuating pressure.

ADVANTAGES AT A GLANCE

- Easy operation with three keys with two-line display
- Preset parameters, individually customizable if required
- Distance measurement with lever system and internal rotary potentiometer
- Position feedback 0/4 ... 20 mA or 0 ... 10 V optional
- Mounting parts or assembly optional

baelz 88 positioner - technical specifications						
Device		**88-Sp400**	**88-Sp401**	**88-Sp400-EEx**	**88-Sp401-EEx**	**88-8792**
Housing		Polycarbonate	Aluminium GD-AlSi12	Polycarbonate	Aluminium GD-AlSi12	Aluminium, plastic coated
IP rating		IP 66 (EN 60529) NEMA 4 X				IP 65 (EN 60529)
Explosion protection		-	II2G EEx ia/ib IIC T4/T6* Zone 1 Class I, div. 1, Groups A, B, C, D Class I, Zone 1 AEx (FM) Ex(CSA) ib IIC		-	-
Input signal		4...20mA (2-wire)				0/4...20mA oder 0...10V (4-wire) ***
Position feedback* (optional)		see table of "Optional extras and accessories for baelz 88-Sp40X devices"				for **baelz 88-8792-i** 0/4...20mA or 0...10V (4-wire) ***
Current to maintain auxiliary power		≥ 3,6 mA				
Ambient / operating temperature		-30 ... +80 °C**	-30 ... +80 °C**	-30 ... +50 °C**	-30 ... +50 °C**	0 ... +60 °C
Supply air pressure		1,4 ... 6 bar				
Air quality acc. to ISO 8573-1*		Particles: Class 3 Pressure dew point: Class 3 Oil content: Class 3				Particles: Class 7 Press. dew point: Class 3 Oil content: Class X
Steady state internal air consumption		0,036 m³/h				no internal air consumption
Electrical connection		M 20 x 1,5				2 x M 20 x 1,5 screw terminals
Pneumatic connection		G ¼ sleeve connection				
Dimensions		182 x 95 x 97 mm				171 x 100 x 110 mm
Weight, approx.	**without fitting set**	0.9	1.3	0.9	1.3	1.0
	with fitting set	1.8	2.2	1.8	2.2	1.3
Stroke		8 ... 22 mm / 40 ... 66 mm				max. 22/max. 66 mm
Assembly and fitting set (optional)		Suffix "-M" is added to type number (actuator not included in price)				

* With position feedback option only T4 valid
** At ≤ -10 °C limited display refresh rate of the LCD
*** Please state desired signal when ordering

Air throughput for baelz 88-Sp40X devices			
Throughput m³/h at	**2 bar**	**4 bar**	**6 bar**
Air supply valve	4.1	7.1	9.8
Exhaust air valve	8.2	13.7	19.2

Burden voltage (□ Ω at 20 mA)		
	without HART	**with HART**
88-Sp400 / 88-Sp401	max. 6.48 V (□ 324 Ω)	max. 6.72 V (□ 336 Ω)
88-Sp400-EEx / 88-Sp401-EEx	max. 8.3 V (□ 415 Ω) Int. capacitance Ci: ≤ 22 nF Internal inductivity: ≤ 0.12 mH	max. 8.3 V (□ 415 Ω) Int. capacitance Ci: ≤ 7 nF Internal inductivity: ≤ 0.12 mH

Optional extras and accessories for baelz 88-Sp40X devices		
Type	**Designation**	**Description**
MP88-i	Position feedback	40...20 mA, auxiliary supply +12...+35 V DC
MP88-i-Ex	Position feedback explosion protection II2G EEx ia/ib IIC T4 Zone 1	40...20 mA, auxiliary supply +12...+35 V DC
MP88-K	Limit contact module	includes: 1 binary (transistor) output for a collective error message, max. 35 V DC 2 switches to report on 2 mechanically selectable limit values max. contact load 250 V AC or 24 V DC; max. current AC/DC 4 A
MP88-K-Ex	Threshold contact module explosion protection II2G EEx ia/ib IIC T6 Zone 1	includes: 1 binary (transistor) output for a collective error message, max. 8,2 V DC 2 switches to report on 2 mechanically selectable limit values max. contact load 30 V DC; max. current AC/DC 100 mA; max. output 750 mW
MP88-MB	pre-fitted manometer block	G ¼, manometer Ø 40 mm; including: 1 manometer: 0...6 bar 1 manometer: 0...10 bar **Please note**: max. air pressure for use with our pneumatic diaphragm actuators 373-P: 6 bar
MP88-ProfiIB-PA	Profi-Bus-PA interface	- Connection to the central control system must be carried out by the customer - A DA/PA coupler (not included) may be necessary
ZB88-T-22 mm	Full fitting set, stroke 8...22	including lever fitting set for positioner (as a spare or for retrofitting) Weight approx. 0.9 kg, for stroke 8...22 mm
ZB88-T-22 mm	Full fitting set, stroke 40...66	including lever fitting set for positioner (as a spare or for retrofitting) Weight approx. 0.9 kg, for stroke 40...66 mm
ZB88-BT-40 mm	Full fitting set	from actuator yoke to lever fitting set for positioner; includes tubing and fitting materials, but not including lever fitting set Weight approx. 0.4 kg; suitable for actuator yokes S21/S21L; for stroke 8...40 mm

Accessories for baelz 88-8792		
Type	**Designation**	**Description**
ZB88-8792-T	Fitting set	for fitting the positioner to Baelz pneumatic actuators 373-P... (already included in device types with "M" = including assembly and fitting set) Assembly and actuator are not included in the price **Note**: Electrical power supply, see baelz 6208...

Example of type designation: baelz 88-Sp400-EEx-H-22 mm-M

baelz - 88-Sp400 - EEx - H - 22 mm - M

Series						
	88-Sp400					
	88-Sp401					
	88-8792					
Explosion protection						
(not for 88-8792)		**EEx**				
With HART						
(not for 88-8792)			**H**			
With position feedback						
(only for 88-8792-i, otherwise as optional extra)				i		
Stroke						
8...22 mm / max. 22 mm					22 mm	
40...66 mm / max. 66 mm					66 mm	
Including assembly and fitting set						
						M

Mechanical limit switches

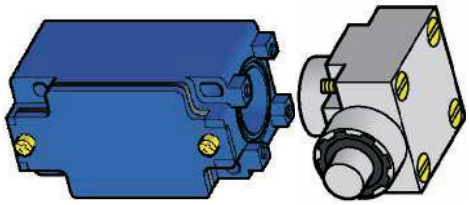

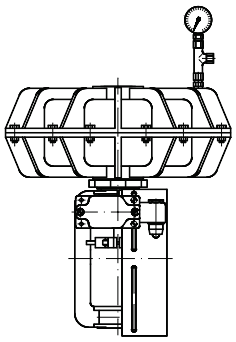

baelz 376-1PEZA
for 373-P21

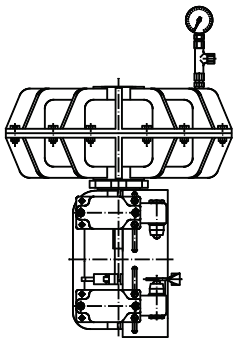

baelz 376-2PEZAZ
for 373-P21

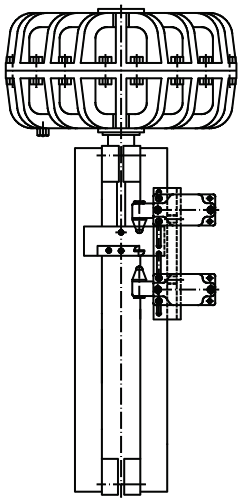

baelz 376-2PEZAZ
for 373-P31/P41

baelz 376-P...PEZ

TECHNICAL SPECIFICATIONS

Standard model
1PEZA: 1 limit switch position "open" (weight. 0.3 kg)
1PEZZ: 1 limit switch position "closed" (weight. 0.3 kg)
2PEZAZ: 2 limit switch positions "open/closed"
(weight 0.6 kg)
IP rating: IP 65
Ambient temperature: -25° C .... + 70° C (operation)
For 373-P21/P22 with stroke: 12, 16, 22 and 40 mm
For 373-P31 with stroke: 44 and 66 mm

Rated current: AC-15 at 240 / 24V, 3A
Dimensions W x H x D (mm): 44 x 40 x 110

Explosion-proof model
1PEZA-Ex. 1PEZZ-Ex. 2PEZAZ-Ex
Version: II2 G EExd IICT6 / II2 D IP 66 T80° C
IP rating: IP 66
Ambient temperature: -20 ... + 40° C (operation)

Inductive proximity switches (contactless)

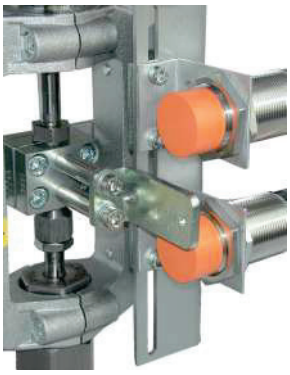

baelz 376-P...INI

TECHNICAL SPECIFICATIONS

Inductive proximity switches including fitting set and assembly

1INIA-PF: 1 limit switch position "open" (weight. 0.3 kg)
1INIZ-PF: 1 limit switch position "closed" (weight. 0.3 kg)
2INIAZ-PF: 2 limit switch position "open/closed" (weight. 0.6 kg)
Switching distance: 5 mm; Operating voltage 5 ... 25 V; Rated current 1 ... 4 mA
Ambient temperature -25 ... 100° C; Cable polyvinyl chloride (PVC), 2 m
Conductor cross section 0.75 mm²
Housing material: stainless steel. M18 x 1
Two-wire connection according to DIN 19234 (NAMUR)
IP rating IP67
Note: In conjunction with baelz 465-KFAA6 ex-intrinsically safe (EExia) II C.

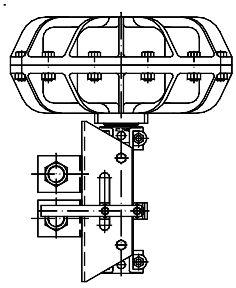

baelz 376-INIAZ-
PF for 373-P21

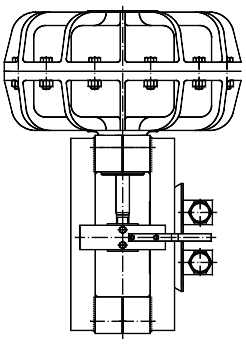

baelz 376-INIAZ-PF
for 373-P31/P41

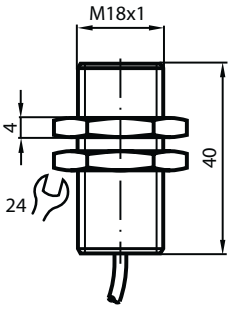

Mounting dimensions

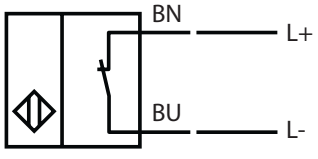

Cable connections

baelz 54298 diaphragm pressure controller with built-in filter/strainer and manometer

baelz 54298

TECHNICAL SPECIFICATIONS

baelz 54298 diaphragm pressure controller with built-in filter

Input air pressure: up to 16 bar Output air pressure: 0.5 ... 10 bar with the manometers:
Model 54298/1: Ø50 mm G1/4"
Housing: cast zinc
Internal parts: brass / stainless steel
Filter/strainer material: polycarbonate
Weight, approx.: 1.8 kg

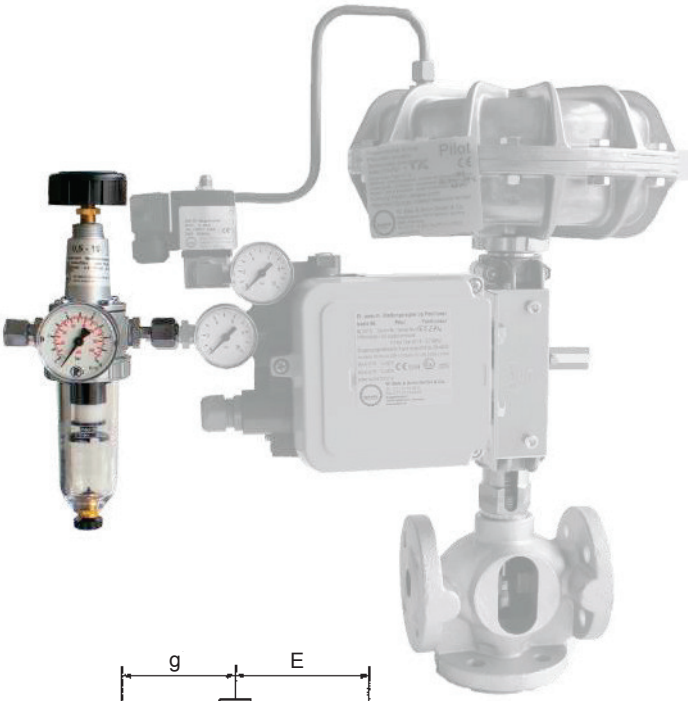

baelz 54298 filter pressure reducer,
with baelz 340-2-B valve and P21 pneumatic actuator, a positioner with two manometers and baelz 268 solenoid valve

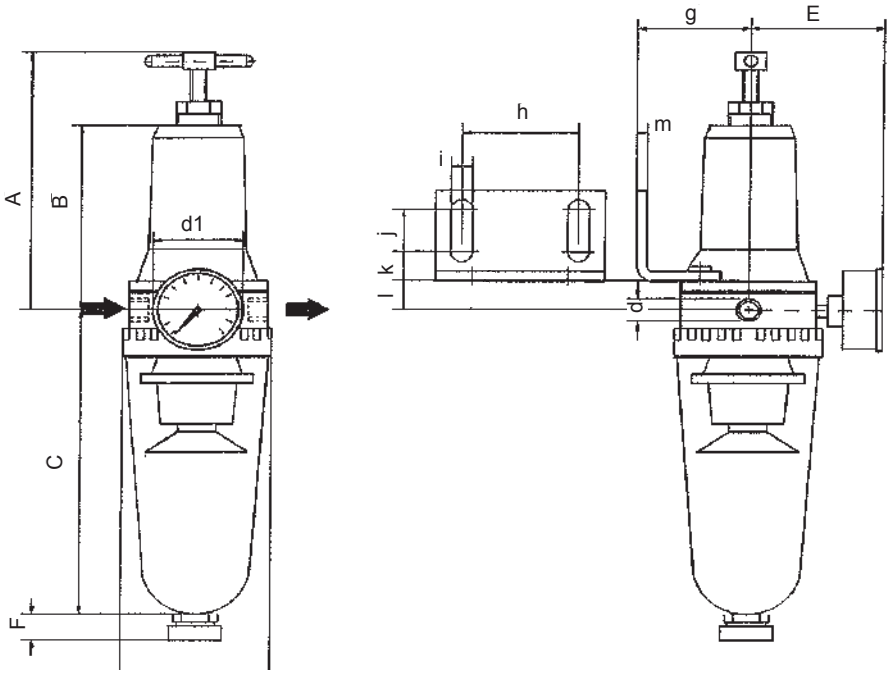

baelz 54298 dimension table	
	54298 1/4“ (mm)
A	100
B	62
C	119
D	57
E	60
F	20
d	G 1/4“
g	35
h	30
i	6.3
j	18
k	7
l	21
m	2
d1	50